Safety Precautions

UV INKJET PRINTER

UJF200-3042
UJF200-6042

Safety Precautions

You can also download the latest manual from official website.

MIMAKI ENGINEERING CO., LTD.

https://mimaki.com/

D203977-11
Original instructions

Table of Contents

Introduction 3
To Ensure Safe Use 5
- Symbols 5
- Usage Precautions 6
- Usage Restrictions 10

Notes on Handling Ink or any Other Liquid Used with the Machine 11
- Restrictions Concerning the Expiration Date of Ink Used in the Machine 12

Installation Precautions 13
- Installation Space 14
- When you want to relocate the machine 15

Safety Interlocks 16
Emergency Stop Switches 17
Warning Label 18

Introduction

Thank you for purchasing the UV-LED curable inkjet printer UJF200-3042/6042.

Read the safety precautions ("this document" hereinafter) thoroughly and make sure you understand its contents to ensure safe and correct use of the product.

Please note that the illustrations contained in this manual are intended to show functions, procedures, or operations and may sometimes differ slightly from the actual machine.

Unauthorized reproduction of any portion of this document is strictly prohibited.

© 2026 MIMAKI ENGINEERING Co., Ltd.

DISCLAIMERS

- MIMAKI ENGINEERING REJECTS ALL LIABILITY FOR DAMAGE ARISING DIRECTLY OR INDIRECTLY FROM THE USE OF THE UJF200-3042/6042 ("THIS MACHINE" HEREINAFTER), WHETHER OR NOT THE PRODUCT IS FAULTY.
- MIMAKI ENGINEERING REJECTS ALL LIABILITY FOR DAMAGE, DIRECT OR INDIRECT, TO MATERIALS CREATED WHILE USING THIS MACHINE.
- USING THIS MACHINE IN CONJUNCTION WITH DEVICES OTHER THAN THOSE RECOMMENDED BY MIMAKI ENGINEERING MAY RESULT IN FIRE OR ACCIDENTS. SUCH INCIDENTS ARE NOT COVERED BY THE PRODUCT WARRANTY. MIMAKI ENGINEERING REJECTS ALL LIABILITY FOR DAMAGE, DIRECT OR INDIRECT, ARISING FROM SUCH INCIDENTS.
- USE ONLY GENUINE MIMAKI ENGINEERING INK AND MAINTENANCE LIQUID. USE OF OTHER PRODUCTS MAY RESULT IN FAILURES OR REDUCE PRINT QUALITY. SUCH INCIDENTS ARE NOT COVERED BY THE PRODUCT WARRANTY. MIMAKI ENGINEERING REJECTS ALL LIABILITY FOR DAMAGE, DIRECT OR INDIRECT, ARISING FROM SUCH INCIDENTS.
- DO NOT ATTEMPT TO REFILL THE INK BOTTLES WITH UNAUTHORIZED INK. SUCH INCIDENTS ARE NOT COVERED BY THE PRODUCT WARRANTY. MIMAKI ENGINEERING REJECTS ALL LIABILITY FOR DAMAGE, DIRECT OR INDIRECT, ARISING FROM SUCH INCIDENTS.
- AVOID USING UV-LED UNITS OR UV POWER SUPPLY UNITS OTHER THAN THOSE SPECIFIED BY MIMAKI ENGINEERING. USING DEVICES OTHER THAN GENUINE MIMAKI ENGINEERING DEVICES MAY RESULT IN FAILURE, ELECTRIC SHOCK, OR FIRE. SUCH INCIDENTS ARE NOT COVERED BY THE PRODUCT WARRANTY. MIMAKI ENGINEERING REJECTS ALL LIABILITY FOR DAMAGE, DIRECT OR INDIRECT, ARISING FROM SUCH INCIDENTS.

TV and radio interference



- The machine emits high-frequency electromagnetic radiation while operating. Under certain circumstances, this may result in TV or radio interference. We make no guarantee that this machine will not affect special radio or TV equipment.

If radio or TV interference occurs, check the radio or TV reception after turning off the machine. If the interference disappears when the power is turned off, the machine is likely to be the cause of the interference.

Try any of the following solutions or combinations of these solutions:

- Change the orientation of the TV or radio antenna to find a position where interference does not occur.
- Move the TV or radio away from this machine.
- Plug the TV or radio into a power outlet on a power circuit other than the power circuit to which this machine is connected.

FCC (Federal Communications Commission) regulations

The machine has been tested and certified to comply with restrictions applying to Class A digital devices under Part 15 of the FCC regulations. These restrictions are designed to provide suitable protection from harmful interference when the printer is used in commercial environments.

This product may generate, use, or emit radio frequency energy and may cause harmful interference with radio communications if not installed or used in accordance with the operating manual.

Use of this product in residential areas may cause harmful interference. If so, the user is responsible for rectifying such interference.



- Use only the cables recommended by Mimaki Engineering when connecting to the machine. Use of other cables may cause the product to exceed the restrictions stipulated by FCC regulations. To maintain compliance with FCC regulations, use the cables recommended by Mimaki Engineering.

To Ensure Safe Use

Symbols

In this manual, symbols indicate and explain precautions. Make sure you fully understand the meaning of each symbol and use the machine safely and correctly.

		Explanation
⚠WARNING	Warning	Indicates a potential hazard that may result in death or serious injury if handled improperly or if instructions are disregarded.
⚠CAUTION	Caution	Indicates a potential hazard that may result in minor or moderate injury if handled improperly or if instructions are disregarded.
NOTICE	Notice	Indicates a potential hazard that may result in property damage if handled improperly or if instructions are disregarded.
	Warning sign	Indicates something that requires attention. Warning specifics are drawn inside the symbol.
	Mandatory action sign	Indicates an action that must be carried out. The specifics of the mandatory action are drawn inside the symbol.
	Prohibition sign	Indicates a prohibited action. The specifics of the prohibited action are drawn inside the symbol.
Important!	Important	Indicates important information related to use of this machine.
	Tip	Indicates useful reference information.
	Reference information	Indicates the corresponding page for related information.

Usage Precautions

In the event of abnormal conditions

⚠ WARNING



- In the event of abnormal conditions such as smoke or unusual odor, turn off the main power immediately and unplug the power cable. Continuing to use the machine under these conditions may result in failure, electric shock, or fire. Once you have confirmed that smoke is no longer being emitted, contact your local dealer or our service office. Never attempt to repair the machine yourself, which is hazardous.

⚠ CAUTION



- Immediately wipe off any ink, maintenance liquid, waste ink, or other liquid used with the product that comes into contact with your skin. Then wash using soap, and rinse with plenty of water. Failure to wash off ink may result in skin inflammation. If your skin becomes irritated or painful, seek medical attention immediately.
- If ink, maintenance liquid, waste ink, or any other liquid used in the product comes into contact with your eyes, rinse immediately with plenty of clean water. Rinse for at least 15 minutes. If you are wearing contact lenses and can remove them easily, rinse them under clean running water for at least 15 minutes before removing them. Be sure to also rinse the undersides of your eyelids. Failure to rinse off ink may result in blindness or impaired vision. If your eyes become irritated or painful, seek medical attention immediately.
- If ink, maintenance liquid, waste ink, or any other liquid used in the product enters your mouth or is swallowed, gargle with water immediately. Do not induce vomiting. Seek medical attention promptly. Inducing vomiting may cause liquid to enter the airway.
- If a large amount of vapor is inhaled, move to a well-ventilated area, keep warm, and rest in a posture that allows easy breathing. If the condition does not improve, seek medical attention promptly.

NOTICE



- If an ink leak occurs, turn off the main power immediately and unplug the power cable. Then, contact your local dealer or our service office.

Power supply precautions

⚠ WARNING

- Use the power cable provided. Otherwise there is a risk of failure, electric shock, or fire. The power cable provided is exclusive for the machine, and must not be used for other electrical equipment.
- Always hold the plug when removing the power cable. Pulling out the power cable may damage the cable, leading to failure, electric shock, or fire.
- Do not use the machine with dust accumulated on the power plug. Otherwise there is a risk of failure, electric shock, or fire.
- Take care to prevent metals from touching the power plug blades. Otherwise there is a risk of failure, electric shock, or fire.
- Do not damage or modify the power cable. Do not place heavy objects on, heat or stretch it. Doing so may damage the cable, leading to electric shock or fire.
- Do not use extension cords or power strips. Otherwise there is a risk of failure, electric shock, or fire.
- Do not use the power cable if it is damaged or broken or if the core wire is exposed. Otherwise there is a risk of failure, electric shock, or fire.
- Do not handle the power plug with wet hands. Disregarding this precaution may result in electric shock.

- Plug the power cable plug into a grounded power outlet. Otherwise there is a risk of failure, electric shock, or fire.
- When installing electrical outlets, perform grounding work to prevent electric shock. All electrical work (Class C grounding work; formerly Type 3 grounding work) must be handled by a licensed electrician.

NOTICE

- Do not turn off the main power supply. Turning off the main power supply will disable the automatic maintenance function (including nozzle clogging prevention function and ink discharge channel cleaning function). This increases the risk of ejection failures (such as nozzle clogging or deflection).

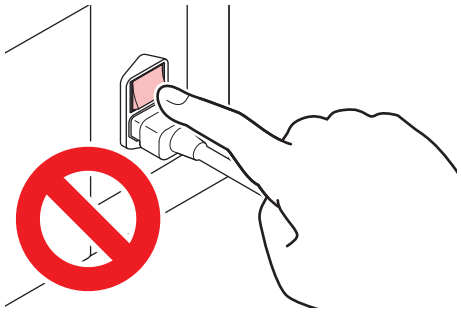

- Use the machine with a power supply that meets specifications.
- Be sure to plug the power cable into a power outlet close to the machine. Insert the power plug blade securely.
- When connecting the power cable, check the input voltage of the power outlet and the capacity of the breaker. Also, connect each cable to a separate power source with an independent breaker. Connecting to power outlets linked with the same breaker will cause the breaker to trip.

Please do not ride the machine.

NOTICE

- Please do not climb onto the table under any circumstances. The accuracy of the table surface may be compromised, which could affect print quality.

● Caution regarding moving parts

⚠CAUTION



- Keep parts of the body such as the face and hands away from moving parts. Also keep clothing (e.g., loose clothing and accessories) that may impede work away from the machine. Failure to do so may result in injury.



- Long hair should be tied back. Failure to do so may result in injury.

● Do not disassemble or repair

⚠WARNING



- Do not attempt to disassemble or repair this machine. Otherwise there is a risk of failure, electric shock, or fire.

● Ultraviolet light (UV) and the UV-LED unit

⚠WARNING



- Do not place combustibles under the UV-LED unit, and do not cover it with paper or cloth. There is a risk of fire or burns.
- Small amounts of ultraviolet light may leak from the UV-LED unit. Wear UV safety glasses, face shields, masks, gloves, and long-sleeved clothing to protect the eyes and skin from ultraviolet light.

  (1) Exposure to ultraviolet light may result in skin inflammation. Even if no inflammation occurs, extended or repeated exposure may lead to chronic problems.
  - Acute problems: Inflammation
  - Chronic problems: Skin cancer, wrinkles, blotches

  (2) Looking directly at the lamp while the lamp is on may result in eye pain or damage to eyesight. Even if no eye pain occurs, extended or repeated exposure may lead to chronic problems.
  - Acute problems: Ultraviolet keratitis, conjunctivitis, discomfort, pain, watery eyes
  - Chronic problems: Pterygium, cataracts

⚠CAUTION



- The UV-LED unit becomes extremely hot. Be careful not to touch the LED after it has been turned off until it has sufficiently cooled.



- Do not expose the skin or eyes directly or indirectly to light from the UV-LED unit. The UV-LED unit emits ultraviolet (UV) light. Skin or eye exposure may result in inflammation.



- Always wear the provided UV safety glasses. Otherwise there is a risk of eye pain or visual impairment.

NOTICE

- Avoid scratching or subjecting the UV-LED unit to excessive force. Disregarding this precaution may result in deformation or failure of the unit.
- Avoid touching the glass on the underside of the UV-LED unit with bare hands. Disregarding this precaution may impair UV ink curing. If the glass becomes dirty, wipe clean using a soft, clean cloth soaked with ethanol. Be careful to keep ethanol from splashing on the covers or other parts while cleaning. Disregarding this precaution may result in deformation or failure of the unit.

About Lasers

⚠ WARNING

- The machine is a class 1 laser product, but the laser sensor uses a Class 2 laser. Never look directly into the laser beam. It can cause eye pain and vision problems.

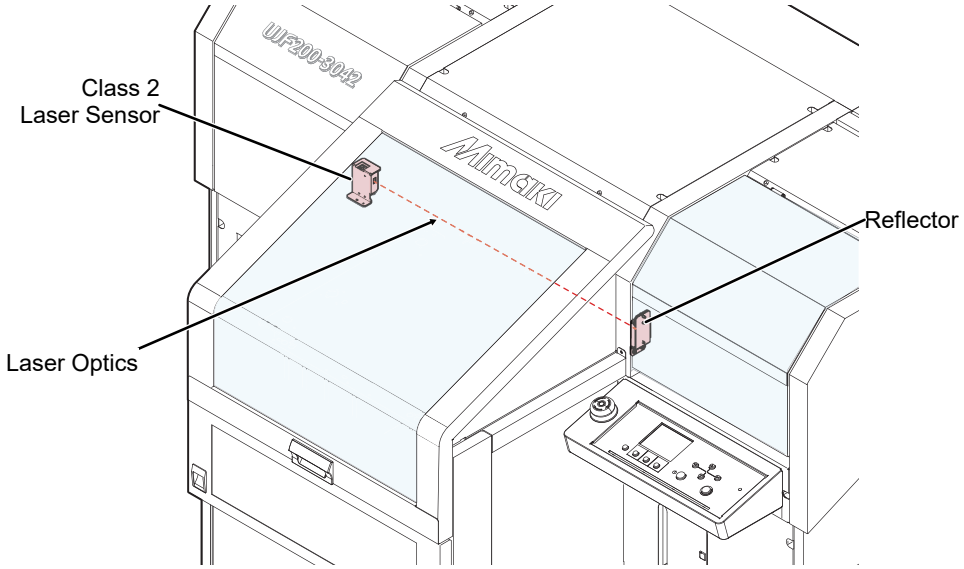

Other usage precautions

⚠ WARNING

- Keep children away from the machine.

NOTICE

Disposing of the product

⚠ CAUTION

- Please contact your local retailer or service agent.
- When disposing of the product yourself, contact an industrial waste disposal operator or dispose of the product in accordance with local laws and regulations.

Usage Restrictions

Usage Restrictions

⚠ WARNING

- The machine is extremely dangerous because the carriage moves rapidly from side to side, the table moves, and it contains high-temperature components, hazardous voltage components, and UV LEDs. The machine must only be used by persons who are fully aware of these hazards.

Operator Restrictions

⚠ WARNING

- The machine must only be operated by persons who have received Mimaki safety training or who have been trained by them.

Area Restrictions

⚠ WARNING

- Entry into the restricted area must be prohibited for anyone other than those who have received Mimaki risk assessment training or who have been trained by them.

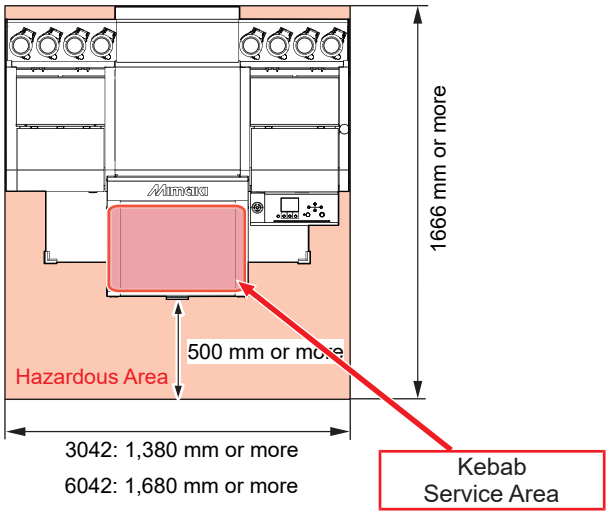

- The UV-LED in the printer unit is classified as Risk Group 2 in accordance with IEC 62471. Please use this product in accordance with the warning labels on the product and the safety instructions in this manual.

- The optional KebabHS system is classified as Risk Group 3 in accordance with IEC 62471. When accessing the interior of the KebabHS device, be sure to wear UV safety glasses and protective gloves.

- Physically separate the machine, for example, by placing in a special room or in an area surrounded by a safety fence. It must be clear that this is a hazardous area.
  (1) Any special room provided should incorporate a door that can be locked or has a safety interlock
  (2) Any safety fences used must conform to the EN ISO 13857 standards.

Notes on Handling Ink or any Other Liquid Used with the Machine

Precautions regarding ink, maintenance liquid, or other liquids used with this machine are included with the containers. Thoroughly read them and make sure you understand the contents.



- Be sure to read the safety data sheet (SDS) before use. https://mimaki.com/supply/sds/

⚠CAUTION



- Pay close attention to ventilation and be sure to wear safety glasses, gloves, and a mask when handling ink, maintenance liquid, waste ink, or other solutions used with the machine. Leaking ink may adhere to the skin or get into the eyes or mouth.



- Do not subject cases containing ink to strong shock or violent shaking. Do not attempt to refill the ink. Leaking ink may adhere to the skin or get into your eyes or mouth.



- Do not disassemble cases containing ink. Leaking ink may adhere to the skin or get into your eyes or mouth.



- Do not store ink, maintenance liquid, or other liquids used with the machine in locations where children may enter.



- When disposing of ink, maintenance liquid or other liquid used with the product, or containers or non-woven fabric contaminated with ink or other liquid, contact an industrial waste disposal operator or dispose of the product in accordance with the local laws and regulations.

NOTICE



- Do not store ink, maintenance liquid, or other liquids used with the machine in locations exposed to direct sunlight.
- Do not store ink, maintenance liquid, or other liquids used with the machine in environments where cutting fluid or other volatile substances (such as amines or modified amine alcohol) are present in significant quantities. Storage in such places increases the risk of failure or ejection failures (e.g., nozzle clogging or deflection).
- Do not use ink, maintenance liquid, or other liquids used with this machine with other printers. Doing so may cause failure.



- Be sure to store them in a low place no higher than 1 m above the floor. Otherwise there is a risk of scattering if the containers fall.
- Store in tightly sealed containers.
- Store in a cool, dark place.
  (1) Store ink in a place where ink does not freeze. Using defrosted ink may deteriorate ink constituents and reduce print quality.
  (2) When ink is moved from a cold place to a warm place, leave it in the environment where the machine is installed for at least three hours before using it.
  (3) Open the container just before installing it, and use it up as quickly as possible. If it is opened and left for an extended period of time, print quality may be reduced.

- Do not touch the metal parts of the ink IC chip. Static electricity may damage the ink IC chip, and dirt or damage may cause the ink IC chip read error.

- Printing is not possible when different types of ink IC chips are used.
- If the ink bottle mounted on the machine is dented, it may still be used.

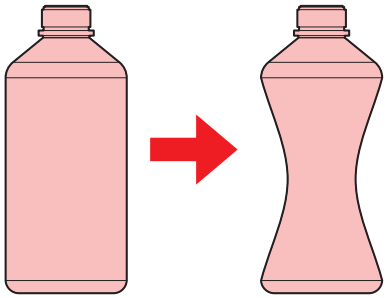

Restrictions Concerning the Expiration Date of Ink Used in the Machine

Example: When the expiration date is April 20xx

- May 20xx: Replace with new ink or use up as quickly as possible. Printing is possible.
- June 20xx: Replace with new ink or use up as quickly as possible. Printing is possible.
- July 20xx: Printing is not possible.

- The message appears on the display.

Important!

- The ink expiration date is indicated on the ink container. Expired ink may cause ejection failures or alter the color tone. Printing is possible even if the ink has passed its expiration date. Nevertheless, we recommend replacing with new ink or using up as quickly as possible.

Installation Precautions

⚠ WARNING



- Do not install the machine in a place close to fire.
- Do not place flower vases, pots, cups, containers containing cosmetics, chemicals or water, or small metal items on or close to the machine. If they enter the machine, there is a risk of failure, electric shock, or fire.



- Do not install this machine in humid locations or locations where it may be exposed to splashing water. Otherwise there is a risk of failure, electric shock, or fire.



- Do not install the machine in a place where children may enter.

⚠ CAUTION



- A ventilation system must be provided if the machine is installed in a poorly ventilated area or sealed room.
- Be sure to observe the following points regarding exhaust port installation:
  (1) Exhaust port installation must conform to local environmental, health, and safety (EHS) guidelines.
  (2) If the exhaust port is fitted with a shutoff valve, the valve must be open when the machine is in use.

NOTICE



- Do not install the machine in areas where there is dust or fine particles. If water gets inside the machine, it may cause failures or ejection failures (such as nozzle clogging or nozzle deflection).
- Do not place the machine in a location where it is exposed to air from an air conditioner or other source. Dust and other particles may enter the interior of the machine.
- Do not install the machine in an unstable location or in an area subject to vibration. This can cause failures or ejection failures (such as nozzle clogging or nozzle deflection).
- Do not place the machine in direct sunlight.
- Do not install the machine in locations subject to extreme temperature fluctuations. This can cause failures or ejection failures (such as nozzle clogging or nozzle deflection).
- Do not install the machine in a location where large machinery that generates noise is located.
- Do not install the machine in areas where vapors from photographic fixing agents or acidic gases (such as acetic acid or hydrochloric acid) are present, or where the air is filled with metalworking fluids or highly volatile substances (such as amines or amine-modified alcohols). If installed in such an environment, the ink on the print head surface will harden, causing failures or ejection failures (such as nozzle clogging or nozzle deflection).



- Operating environment: 20 to 30 °C (68 to 86 °F), 35 to 65 %RH (no condensation)
- Temperature range in which accuracy is guaranteed: 20 to 25 °C (68 to 77 °F)

Installation Space

Provide the following space around the machine to allow safe and proper replacement of ink and media:

Item	UJF200-3042	UJF200-6042
Width*1	At least 2,580 mm (1,380 mm)	At least 2,880 mm (1,680 mm)
Depth*1	2,166 mm or greater (1,166 mm)	
Height*1 (Includes the color indicator lamp.)	1,524 m*2 or greater (1,186 mm)	
Weight*1	259 kg*2 (171 kg)	275 kg*2 (187 kg)

*1. The figures in parentheses indicate machine dimensions.

*2. Includes a dedicated stand.

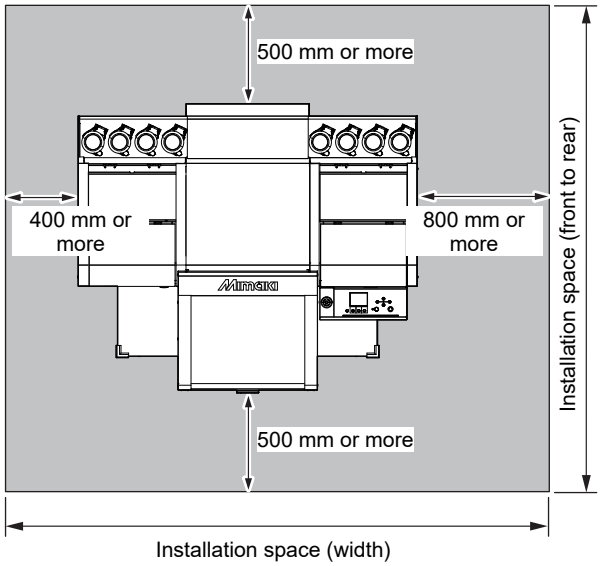

- If the genuine option "A107806 / OPT-01034 Dedicated Installation Stand" is not used and a custom stand is used instead, prepare a stand that meets the following specifications.
  (1) Load capacity: 414kg or more (evenly distributed load)
  (2) Flatness: The local deflection of the top surface of the stand shall not exceed 0.3 mm when a concentrated load of 41.4 kg is applied at each adjuster foot position shown in the figure on the following page.

Position of the Level Foot on This Unit

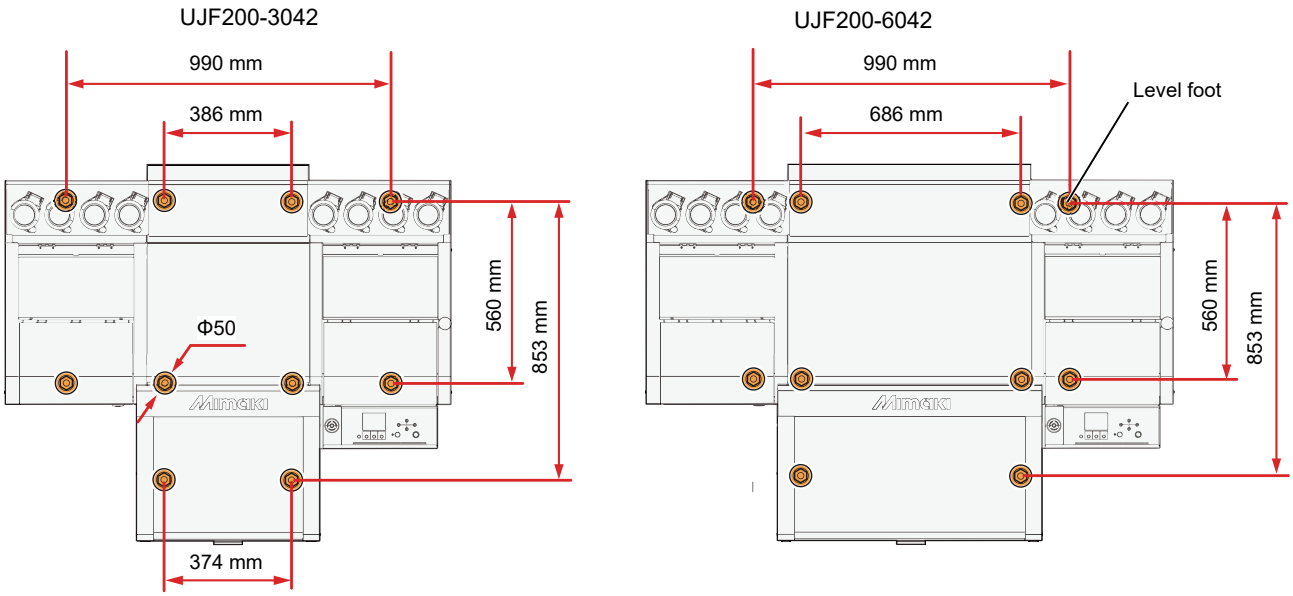

When you want to relocate the machine

Contact your local dealer or our service office. There is a risk of failure or damage to the machine if you try to move it yourself.

Safety Interlocks

For safety reasons, the machine is equipped with safety interlocks that stop operation if the cover opens during printing or other operations. (The area circled in red in the figure below)

If you open the cover while printing, the print job will be interrupted, and you will need to receive the RIP data again.

- Safety interlock locations

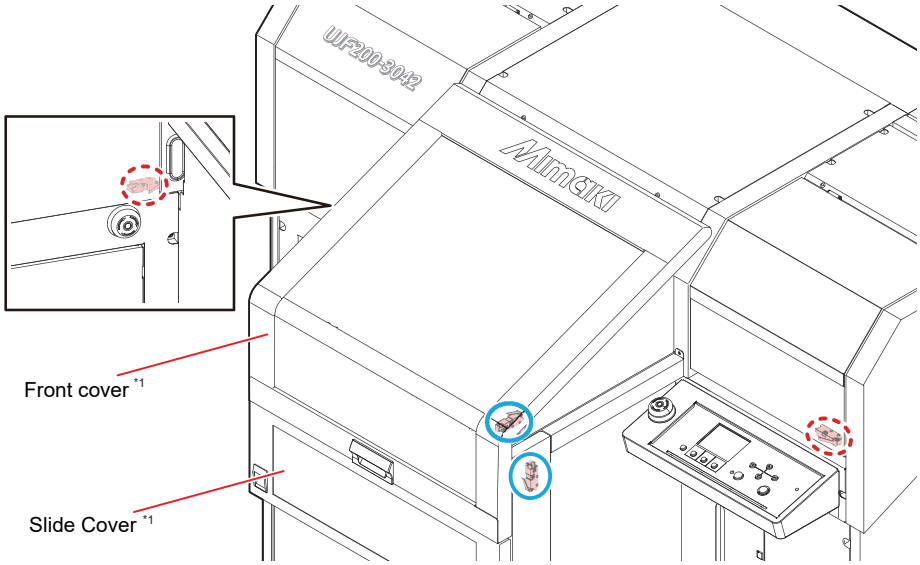

*1: Opening the front cover or slide cover while the machine is running will stop the carriage, but this is not a safety interlock. (The area circled in blue in the figure above)

Emergency Stop Switches

There are two emergency stop switches. Use this feature when you need to stop the machine immediately for safety reasons.

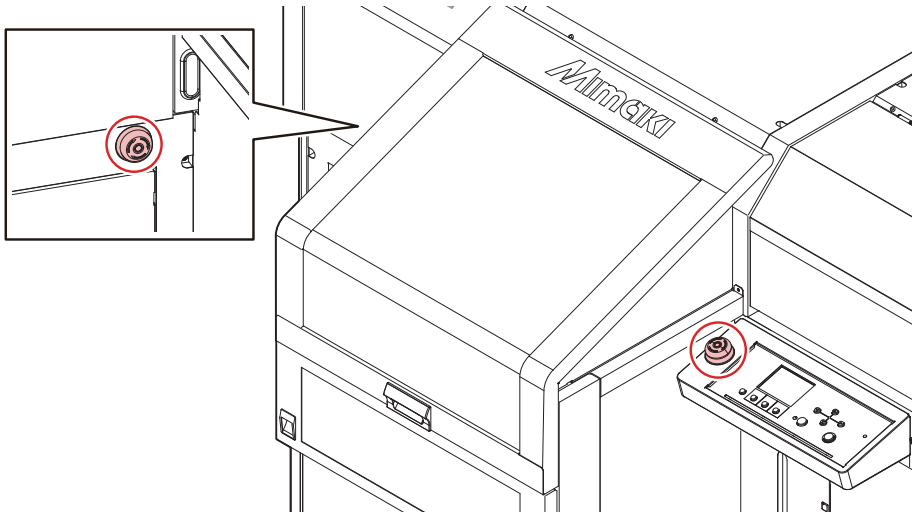

Important!

- Do the following after an emergency stop switch has been pressed.
  (1) Unplug the machine from the power outlet and resolve the problem.
  (2) After confirming safety, deactivate the emergency stop switch.

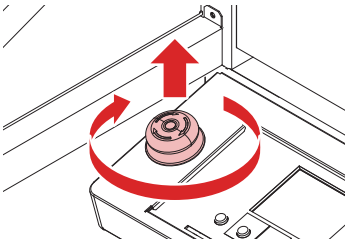

  (3) Plug the machine into the power outlet.

Warning Label

Make sure you fully understand the details indicated on the various warning labels.

If any labels are dirty, illegible, or peeling, contact your local dealer or our service office to obtain new ones.

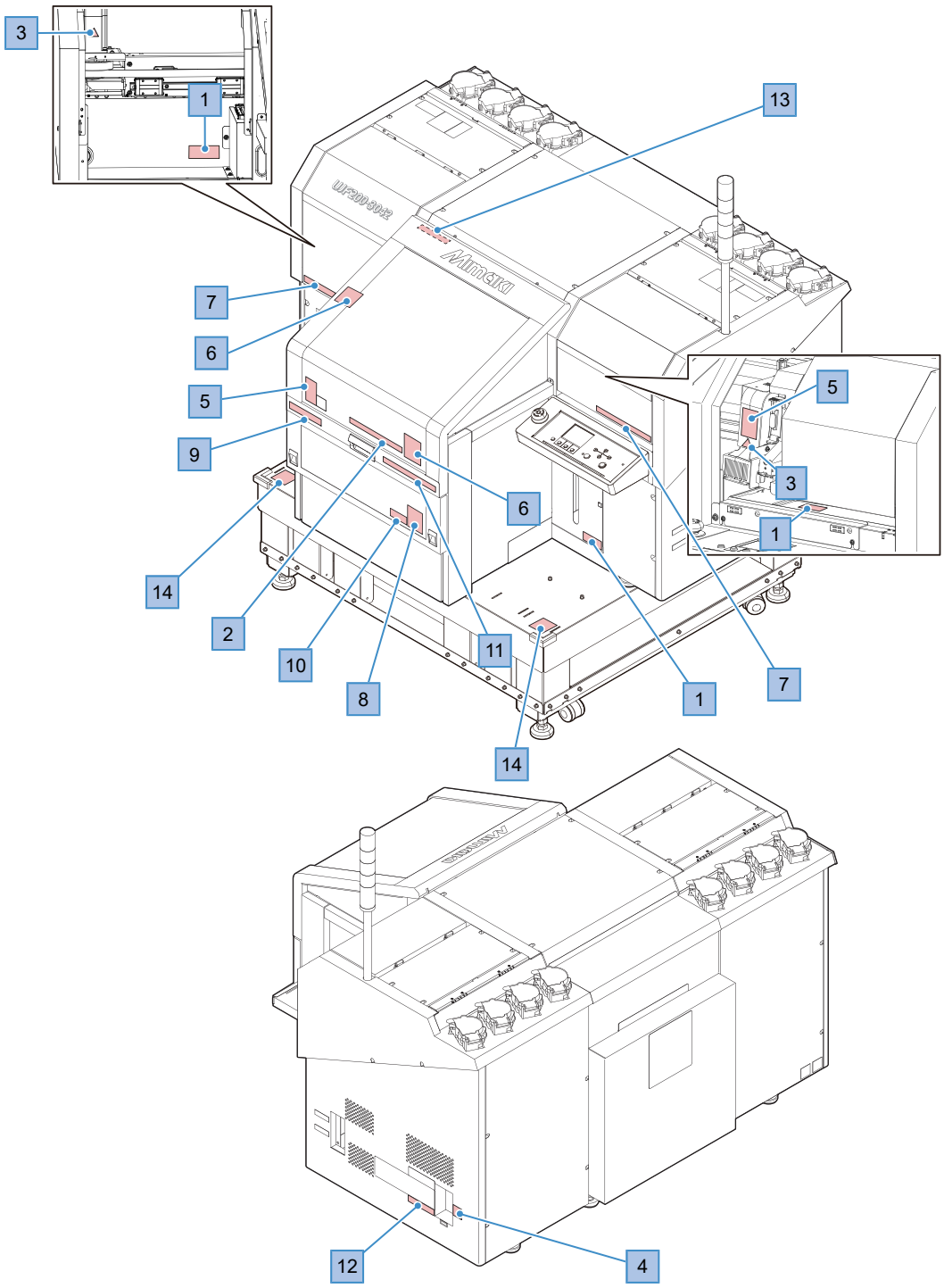

No.	Order code	Label	Details
1	M903330		There is a risk that liquids such as ink may splash and come into contact with your skin or get into your eyes. Please wear safety glasses and gloves when working.
2	M905811		Indicates dangerous moving parts. When the carriage is in operation, there is a risk of injury from crushing or shearing, so keep your fingers and body away from it.
3	M906144		Indicates hot parts. Do not touch the heater while it is turned on, as there is a risk of burns.
4	M907935		Indicates dangerous live parts. Do not touch this, as there is a risk of electric shock.
5	M913419		Beware of ultraviolet light. Exposure to ultraviolet rays may cause skin damage or eye problems. While the device is in operation, do not open the cover, look directly at the treatment area, or bring your hands or face close to it.
6	M913423		If the cover closes suddenly due to its own weight, there is a risk of pinching your fingers and causing injury. When opening or closing the cover, please hold it gently with your hand until it is fully open or closed, and operate it slowly.
7	M913425		Be careful of the laser beam. Looking directly at a laser beam may cause eye damage. Do not look directly into the laser.
8	M913610		Indicates dangerous moving parts. There is a risk of injury from crushing or shearing when the table is in operation. Please keep your fingers and body away from it.
9	M915076		This device is classified as a Class 1 laser product under IEC 60825-1 under normal operating conditions. Under normal operating conditions, the laser beam is confined within permissible limits in areas accessible to users.

No.	Order code	Label	Details
10	M921061	RISK GROUP 2 ・WARNING UV emitted from this product. ・Avoid eye and skin exposure to unshielded product. GROUPE DE RISQUE 2 ・AVERTISSEMENT : UV emis par ce produit. ・Eviter l' exposition des yeux et de la peau a un produit non blinde.	The machine emits ultraviolet light. (Risk Group 2) Exposure of the skin or eyes to ultraviolet (UV) light may cause inflammation, so please take care to avoid exposure to UV light.
11	M920704	テーブル上に5kg以上のものを載せないで下さい。 DO NOT PUT MORE THAN 5KG THINGS ON THE TABLE Ne pas poser d' objets d' un poid superieur a 5 kg sur le plateau. 请不要在桌面上放置 5kg 以上的物品	Placing a load exceeding 20 kg on the table may cause damage. Please do not load items weighing more than 20 kg.
12	M920968	Complies with 21 CFR 1040.10 and 1040.11 except for conformance with IEC 60825-1 Ed. 3., as described in Laser Notice No. 56, dated May 8, 2019.	This label indicates that the machine complies with U.S. FDA regulations.
13	M921062	警 告 レーザー光・ビームを覗き込まないこと 最大出力:2mW 波長:655nm パルス持続時間:4us IEC 60825-1:2014 警 告 激光・請勿注視光束 最大輸出功率:2mW 波长:655nm 脉冲持续时间:4us WARNING LASER RADIATION-DO NOT STARE INTO BEAM Maximum Output:2mW Wavelength:655nm Pulse duration:4us Avertissement Rayonnement laser-Ne pas regarder le faisceau Puissance maximale:2mW Longueur d'onde:655nm Durée d'impulsion:4us CLASS 2 LASER SENSOR	This device contains a laser light source classified as Class 2. Be careful of the laser beam when accessing the interior of the device. Looking directly at a laser beam may cause eye damage. Do not look directly into the laser.
14		注意 / COUTION / ATTENTION すねぶつけ注意 Watch your shins Attention aux tibias	This indicates a protrusion that is likely to come into contact with the foot. If your foot comes into contact with the protruding part, you may suffer injuries such as bruises. Please exercise extreme caution in the area surrounding the equipment.

UJF200-3042/6042_Safety Precautions

Nov, 2026

MIMAKI ENGINEERING CO.,LTD.
2182-3 Shigeno-otsu, Tomi-shi, Nagano 389-0512 JAPAN

D203977-11-25112026



© MIMAKI ENGINEERING CO., LTD.2026

AT

FW : 1.2